ONEX®

STAINLESS STEEL SINKS

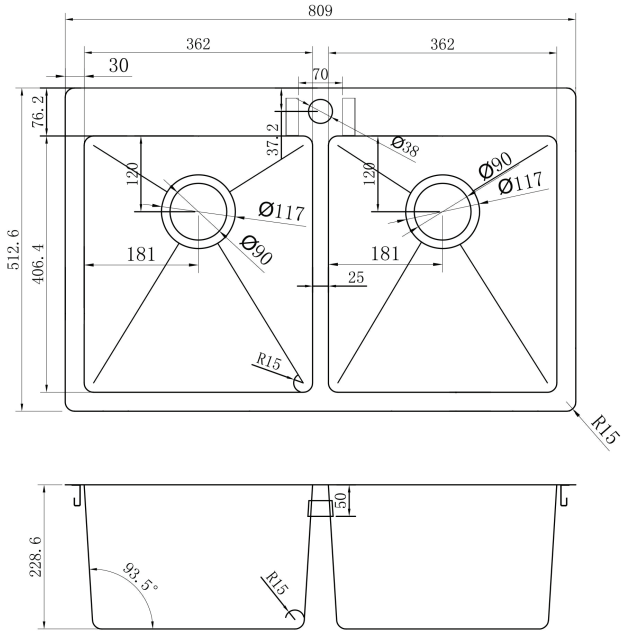

MODEL OD3120-SQR

OVERALL SIZE	809 mm X 512.6 mm 31.85” X 20.18”
BOWL SIZE	362 mm X 406.4 mm / 362 mm X 406.4 mm 14.25” X 16” / 14.25” X 16”
DEPTH	228.6 mm / 9”

- 304 brushed finish stainless steel 18 gauge
- Stainless steel strainer, clips and template included
- Sound deadening pads
- Drain located towards rear to provide more space under the sink
- Product certified ASME A112.19.3, CSA B45.0, and CSA B45.4